P-870H/HW Series

Quick Start Guide

VDSL2 4 port gateway /802.11bg
Wireless VDSL2 4 port gateway

Firmware v1.00
Edition 1, 9/2010

DEFAULT LOGIN DETAILS

IP Address:	http://192.168.1.1
Username:	admin
Password:	1234

ZyXEL

Copyright 2010
ZyXEL Communications Corporation

www.zyxel.com

Device Panels

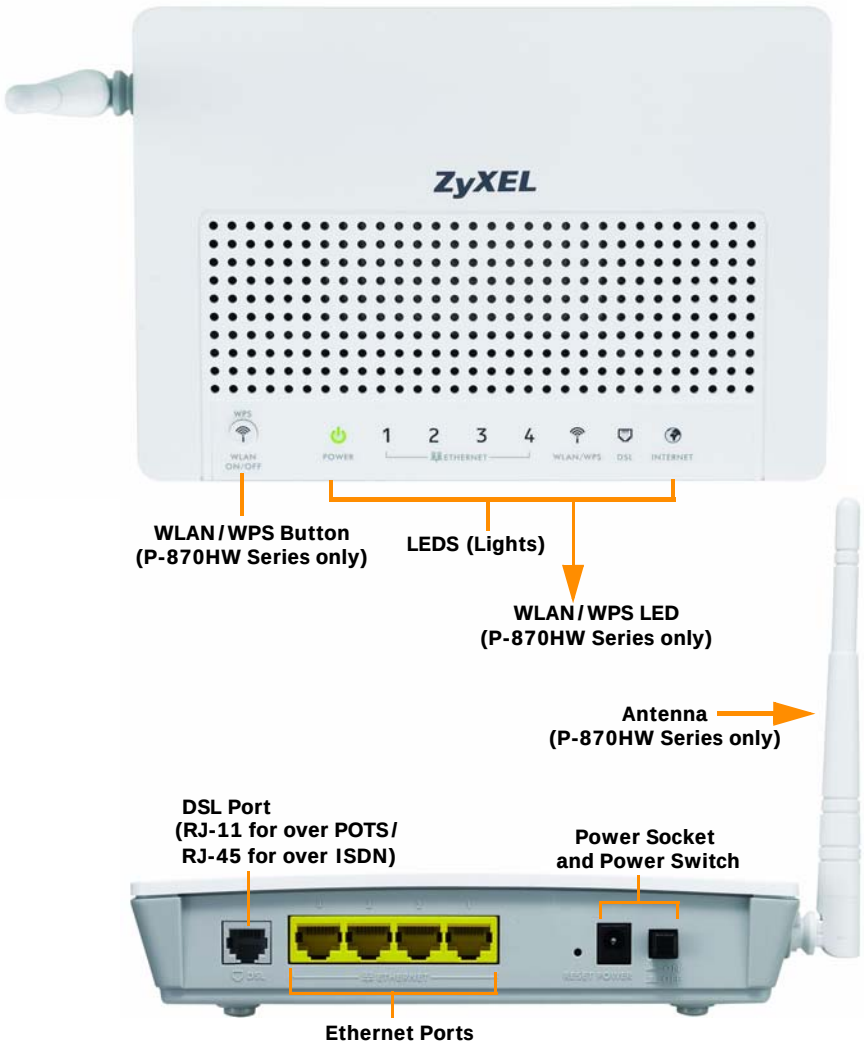

Introduction

The P-870H/HW Series is a VDSL2 gateway that provides super high-speed Internet access through a telephone line. The P-870H/HW Series has a built-in switch that allows you to connect up to four network devices. The P-870HW Series provides IEEE 802.11b/g wireless networking capability.

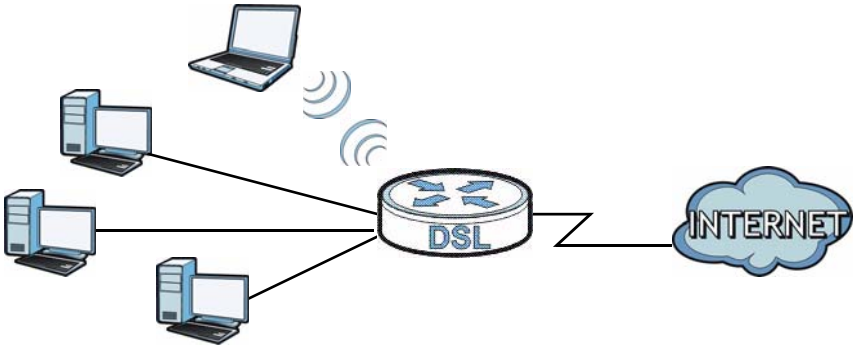

Overview

- Before You Begin, on page 4
- Hardware Connections, on page 5
- Initial Configuration, on page 7
- WLAN Setup with WPS, on page 10
- Wall-mounting, on page 11

Before You Begin

Make sure you have the following things before you set up your P-870H/HW Series.

- Internet access - account information provided by your ISP, such as user name, password, and so on.
- Internet Explorer 6.0 and later versions, with JavaScript enabled, or Mozilla Firefox 3 and later versions or Safari 2.0 and later versions.

See the User's Guide for all configuration details including file sharing and setting up a shared printer.

To read the User's Guide insert the CD that came in the box into your CD-ROM drive. A screen should pop up. Navigate to the User's Guide from this screen. If a screen does not pop up, open Windows Explorer (click My Computer), click on the CD-ROM drive (usually drive D) and navigate to it from there.

Hardware Connections

This section shows you how to set up your P-870H/HW Series.

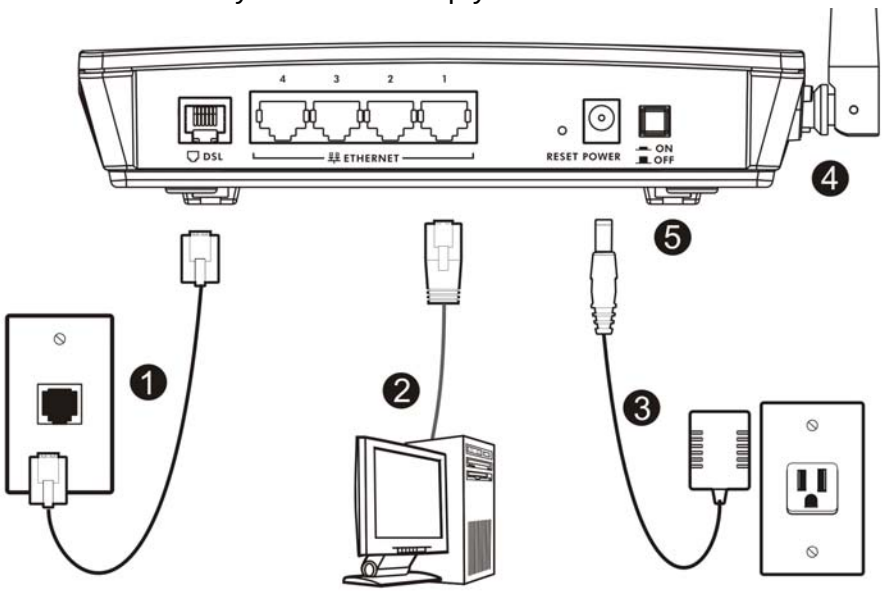

1. **DSL**: Use a telephone wire to connect this port to a telephone jack (or the **DSL** or **MODEM** jack on a splitter, if one is already installed).

2. **ETHERNET 1-4**: Use an Ethernet cable to connect a computer to this port for initial configuration and/or Internet access.

3. Use the power adaptor provided with your P-870H/HW Series to connect an appropriate power source to this socket.

4. Attach the antenna onto the P-870HW Series. The antenna is not available on the P-870H Series.

5. Push the power switch to the on position.

Checking the LEDs (Lights)

Look at the LEDs (lights) on the top panel of the P-870H/HW Series.

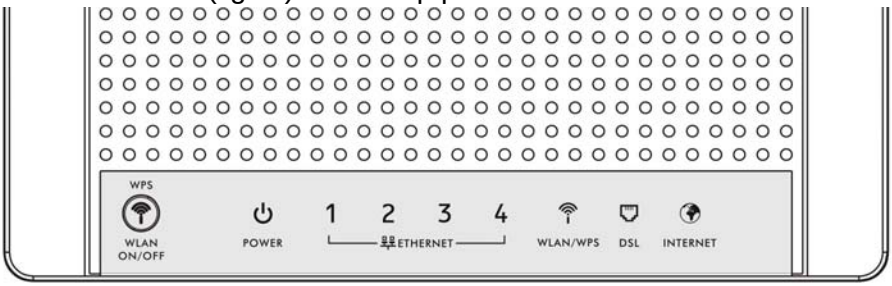

- The **POWER** light blinks during start-up and is green once the P-870H/HW Series is ready.
- Each **ETHERNET** light turns on if the corresponding **ETHERNET** port is properly connected. The lights blink when the P-870H/HW Series is sending or receiving data through the corresponding ETHERNET port.
- The **DSL** light stays on if a physical DSL connection exists and blinks when transmitting data.
- The **INTERNET** light is green when Internet access is available.
- The **WLAN/WPS** light stays green when the wireless LAN is ready. It blinks when the P-870HW Series is sending/receiving data through the wireless LAN. The **WLAN/WPS** light is not available on the P-870H Series.

If none of the LEDs (lights) are on, check your connections. Make sure that you have the power adaptor connected to the P-870H/HW Series and plugged in to an appropriate power source. Make sure the power source is turned on. Turn the P-870H/HW Series off, wait for a few seconds and turn it back on. If the LEDs are still off, contact your local vendor.

Testing Internet Connection

After you have connected the hardware and turned on the P-870H/HW Series, open a web browser on your computer and go to any web site (for example, www.zyxel.com) to test your Internet connection.

If you are prompted for a user name and password, enter the account information as given by your Internet service provider (ISP).

If the **INTERNET** light is off but the **DSL** light is on, go to the Initial Configuration section to configure your Internet access settings.

Initial Configuration

1. Open your browser and enter http://192.168.1.1 (the P-870H/HW Series's default IP address) as the address.

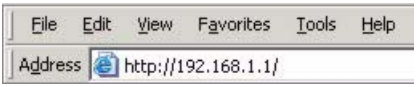

2. Enter the admin user name **admin** and password **1234** (default). Click **OK**.

If the login screen does not display, make sure you allow web browser pop-up windows, JavaScripts and Java permissions. Your computer should be also set to get an IP address automatically from a DHCP server. See the appendices in your User's Guide for more information.

Internet Setup

Go to **Network > WAN > Internet Connection**. Enter the Internet access information exactly as given to you by your ISP in the **Internet Connection** screen and click **Apply**. See your User's Guide for detailed information.

When your Internet connection is setup correctly, the **DSL** and **INTERNET** lights should be green.

If you cannot access the Internet and the **INTERNET** light is off, make sure you enter the correct information in the WAN screens.
If you are using a new Internet account, contact your ISP to make sure it is active.
If you are trying to access the Internet wirelessly, make sure the wireless and security settings in your wireless client are the same as the settings in the P-870HW Series.

Wireless Setup

This section applies to the P-870HW Series only.

To create a wireless network, the P-870HW Series and your wireless computer(s) must all use the same SSID (network name), channel and security settings.

1. Go to **Network > Wireless LAN**.

2. Enable wireless LAN, enter a name to identify your wireless network (such as “ZyXEL“) in the **SSID** field, and select a channel which is not used by neighboring wireless devices.

3. Select your security mode and configure wireless security settings. In this example, the P-870HW Series uses WPA2-PSK for data encryption.

If you do not set wireless security, any one within range could use your P-870HW Series to access your network and the Internet.

Make sure your wireless security settings are compatible with your existing wireless devices. See the User's Guide for more information on wireless networks.

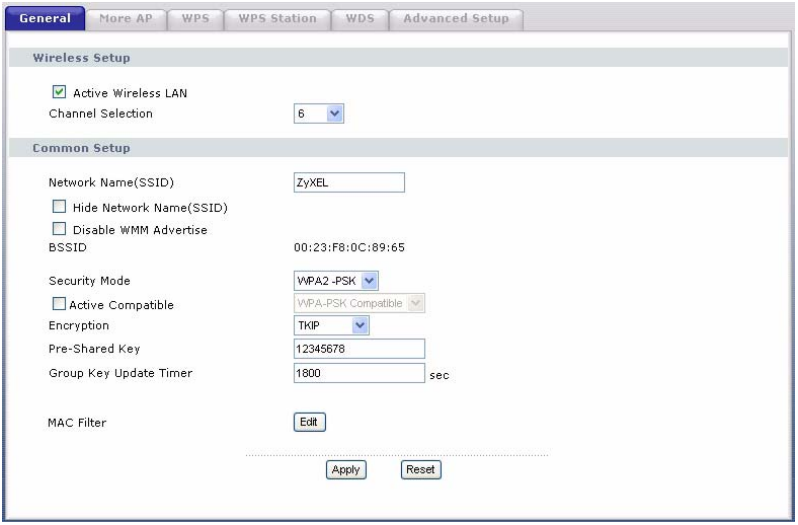

Go to the WLAN Setup with WPS section if you do not want to use the wireless LAN screen to set up your wireless network.

WLAN Setup with WPS

This section applies to the P-870HW Series only.

You can use Wi-Fi Protected Setup (WPS) to set up a secure wireless network and add wireless devices to your wireless network at the touch of a button. The other wireless devices must also support WPS. Look for the WPS logo on the housing of your device.

1. Place a WPS-enabled device within range of the P-870HW Series.

2. Press the **WPS WLAN ON/OFF** button ( ) on the P-870HW Series for five seconds. Press the WPS button on another WPS-enabled device. It doesn't matter which button is pressed first. You must press the second button within two minutes of pressing the first one.

Your P-870HW Series allows the PBC (Push Button Configuration) method, as well as the PIN (Personal Identification Number) configuration via the web configurator. See your User's Guide for more information. Other WPS-enabled devices should provide at least one similar method.

3. The **WLAN/WPS** LED ( ) on the P-870HW Series blinks for a few seconds, then shines steadily, indicating your devices are connected.

4. To add another WPS-enabled device to your wireless network, press the WPS buttons on your P-870HW Series and your next WPS-enabled device.

Congratulations! You are now ready to connect to the Internet wirelessly through your P-870HW Series.

Wall-mounting

Take the following steps to hang your P-870H/HW Series on a wall.

1. Select a position free of obstructions on a sturdy wall.

2. Drill two holes for the screws, exactly 120 mm apart.

3. Be careful to avoid damaging pipes or cables located inside the wall when drilling holes for the screws.

4. Do not insert the screws all the way into the wall. Leave a small gap of about 0.5 cm between the heads of the screws and the wall.

5. Make sure the screws are snugly fastened to the wall. They need to hold the weight of the P-870H/HW Series with the connection cables.

6. Align the holes on the back of the P-870H/HW Series with the screws on the wall. Hang the P-870H/HW Series on the screws.

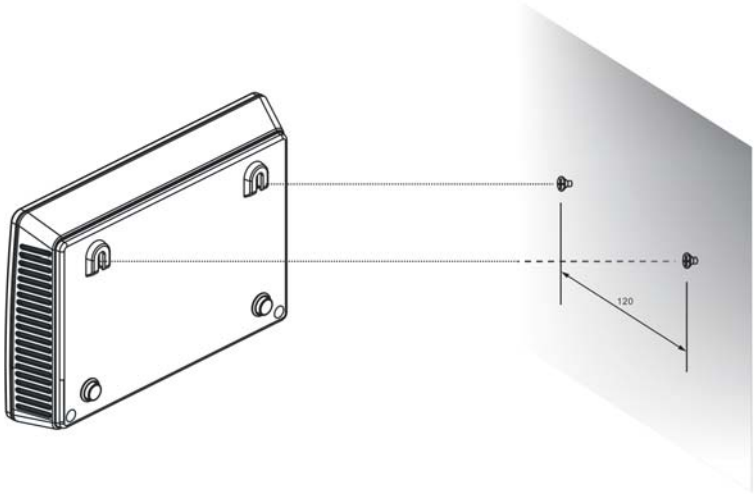

7. The following are dimensions of an M4 tap screw and masonry plug used for wall mounting. All measurements are in millimeters (mm).

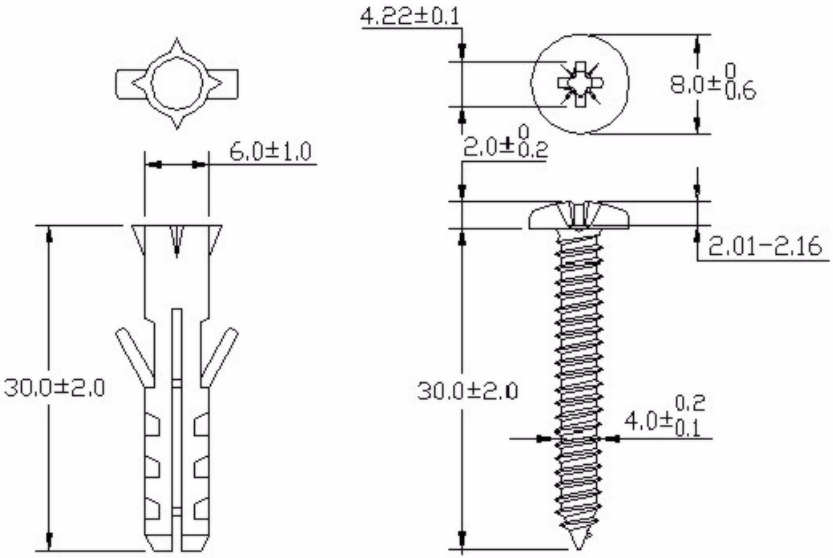

How to View a Product's Certifications

1. Go to www.zyxel.com.

2. Select your product from the drop-down list box on the ZyXEL home page to go to that product's page.

3. Select the certification you wish to view from this page.